PUBLISHED: 25-AUG-2017
2017.0 DISCOVERY (LR), 308-07

TRANSFER CASE - [+] SINGLE SPEED TRANSFER CASE

TRANSFER CASE FRONT OUTPUT SEAL

(G2003498)

REMOVAL AND INSTALLATION

SPECIAL TOOL(S)



205-818

Installer, Seal



308-620

Installer, Seal

transmissionmanuals.com



308-636

Installer



JLR-308-926

Support Tool, Transfer Case



JLR-308-933

Remover, Transfer Case Flange

transmissionmanuals.com

PART(S)

STEP	PART NAME	QUANTITY
Installation Step 2	Transfer case front output seal and bearing kit	1

REMOVAL

NOTE:

- Some variation in the illustrations may occur, but the essential information is always correct.
- Some components shown removed for clarity.

1. Disconnect the battery ground cable.
   Refer to: Specifications (414-00 Battery and Charging System - General Information, Specifications).

2. **WARNING:**

   Make sure to support the vehicle with axle stands.

   Raise and support the vehicle.

3. Drain the transfer case fluid.
   Refer to: Transfer Case Draining and Filling (308-07 Transfer Case - [+] Twin Speed Transfer Case, General Procedures).

4. Remove the transfer case.
   Refer to: Transfer Case - TDV6 3.0L Diesel - Gen 2/TDV6 3.0L Diesel /TDV6 3.0L Diesel - Gen 1.5 (308-07 Transfer Case - [+] Single Speed Transfer Case, Removal).
   Refer to: Transfer Case - V6 S/C 3.0L Petrol (308-07 Transfer Case - [+] Single Speed Transfer Case, Removal).
   Refer to: Transfer Case - INGENIUM I4 2.0L Diesel (308-07 Transfer Case - [+] Single Speed Transfer Case, Removal).

transmissionmanuals.com

5.

CAUTION:

Make sure the bolt holes are clean and free of foreign materials.



Remove the 17 transfer box case bolts.

transmissionmanuals.com

6.

WARNING:

Eye protection must be worn.

CAUTION:

Care must be taken to avoid damage to the mating surfaces.

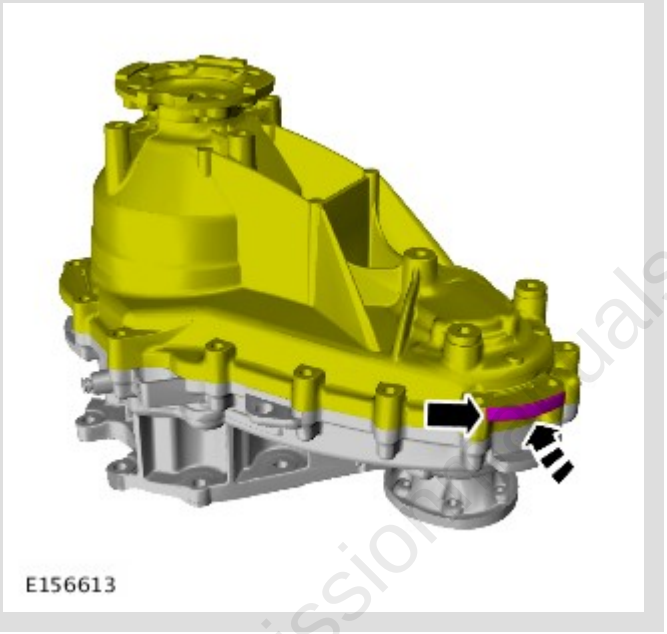

Using a soft faced mallet, release the rear casing.

7.

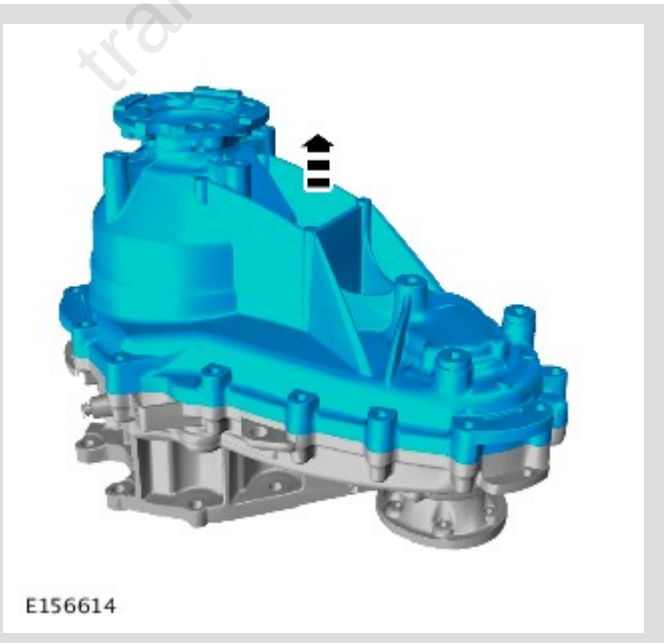

Split the transfer box case.

transmissionmanuals.com

8.

CAUTION:

Make sure that the mating faces are clean and free of foreign material.

Remove the sealant from the transfer case mating faces.

9.

CAUTION:

Note the installed position of the component prior to removal.



transmissionmanuals.com

10.

CAUTION:

Note the installed position of the component prior to removal.

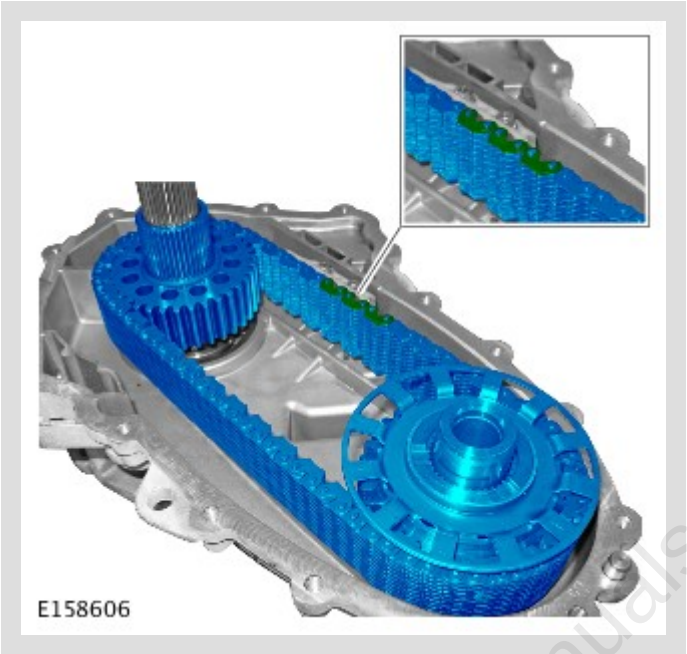

Remove the transfer case chain assembly.

transmissionmanuals.com

11.

CAUTION:

Note the installed position of the component prior to removal.

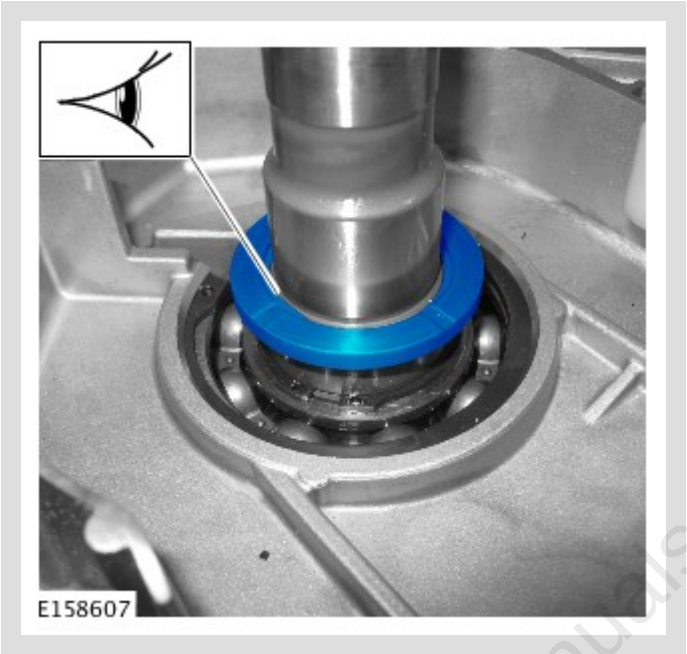

Remove the spacer.

transmissionmanuals.com

12.

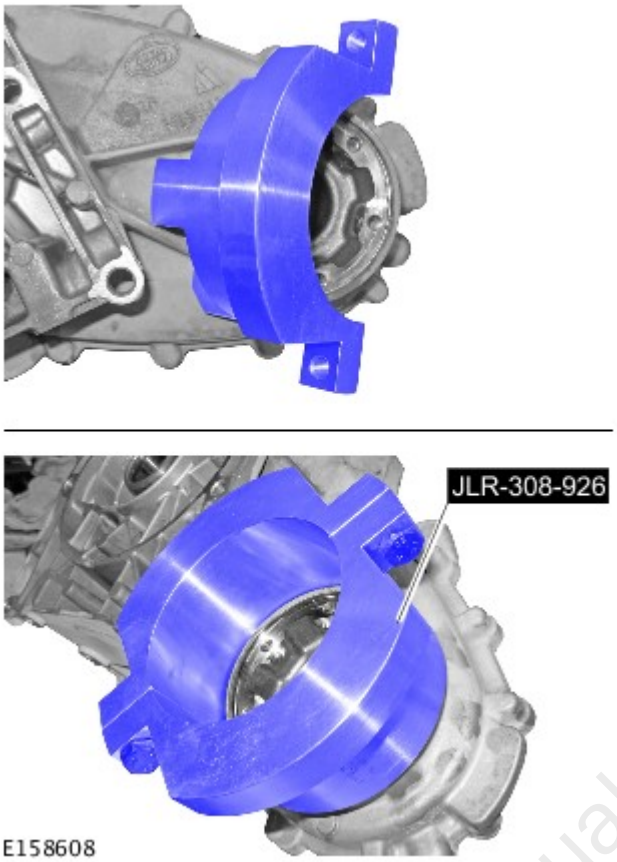

Install the special tool.

Special Tool(s): JLR-308-926

transmissionmanuals.com

13.

CAUTION:

Make sure that the special tool is correctly located. This will make sure that the snap ring is fully compressed during the next step.



Release the snap ring using the special tool.
Special Tool(s): JLR-308-933

transmissionmanuals.com

14.

CAUTION:

- Do not use excessive force whilst removing the flange assembly.
- Discard the snap ring.



Remove the transfer case front output shaft.

15.



Remove and discard the seal.

Transmissionmanuals.com

16.



Remove the bearing.

INSTALLATION

1.



Position the special tool as shown, to support the transfer case during the next step.
Special Tool(s): JLR-308-926

transmissionmanuals.com

2.

CAUTION:

- The chamfer on the bearing inner track must face the seal.
- The transfer case must be supported by the special tool on a flat surface during this step.

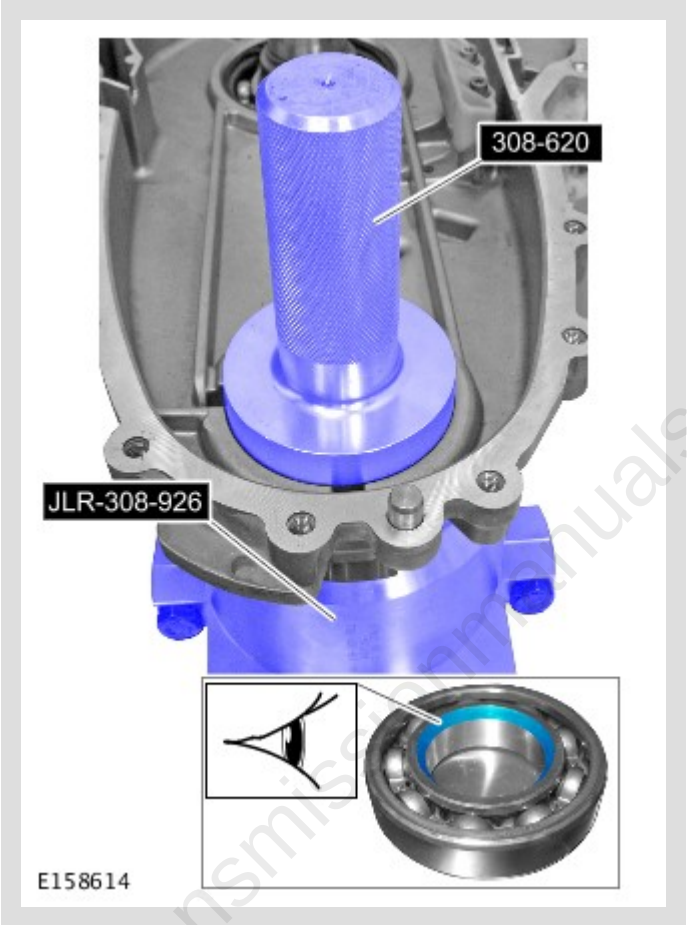

transmissionmanuals.com

- Install the bearing.
  Special Tool(s): 308-620
- *Renew Part:* *Transfer case front output seal and bearing kit* *Quantity:* *1* .

3.



- Install the seal.
  Special Tool(s): 308-636

transmissionmanuals.com

4.



- Centralise the snap ring in the snap ring groove before installing the output flange.
- Extreme care is necessary to make sure the snap ring enters the bearing squarely.
- Install a new snap ring.
- Using the special tool and with assistance, install the drive flange.
  Special Tool(s): 205-818

transmissionmanuals.com

5.

NOTE:

Make sure that the component is installed to the noted removal position.



Install the spacer.

transmissionmanuals.com

6.

CAUTION:

The dark links in the chain face up as shown.

NOTE:

Make sure that the components are installed to the noted removal position.

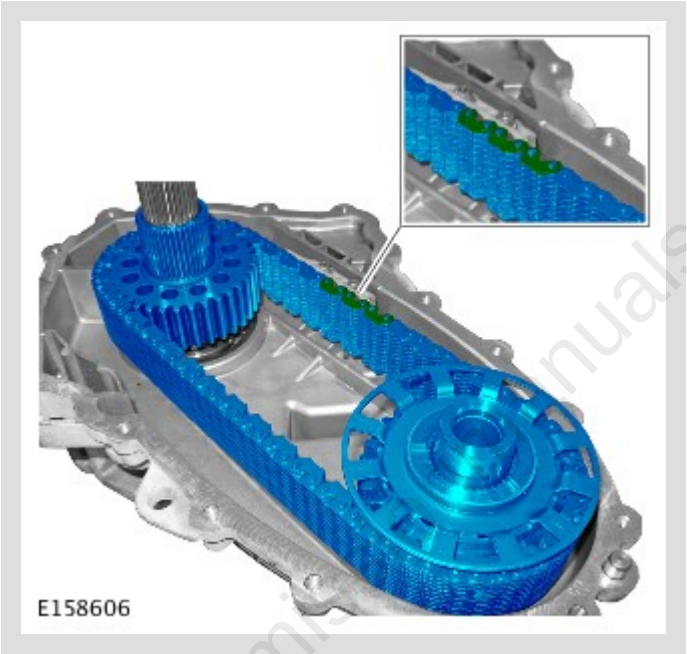

Install the transfer case chain assembly.

transmissionmanuals.com

7.

NOTE:

Make sure that the component is installed to the noted removal position.

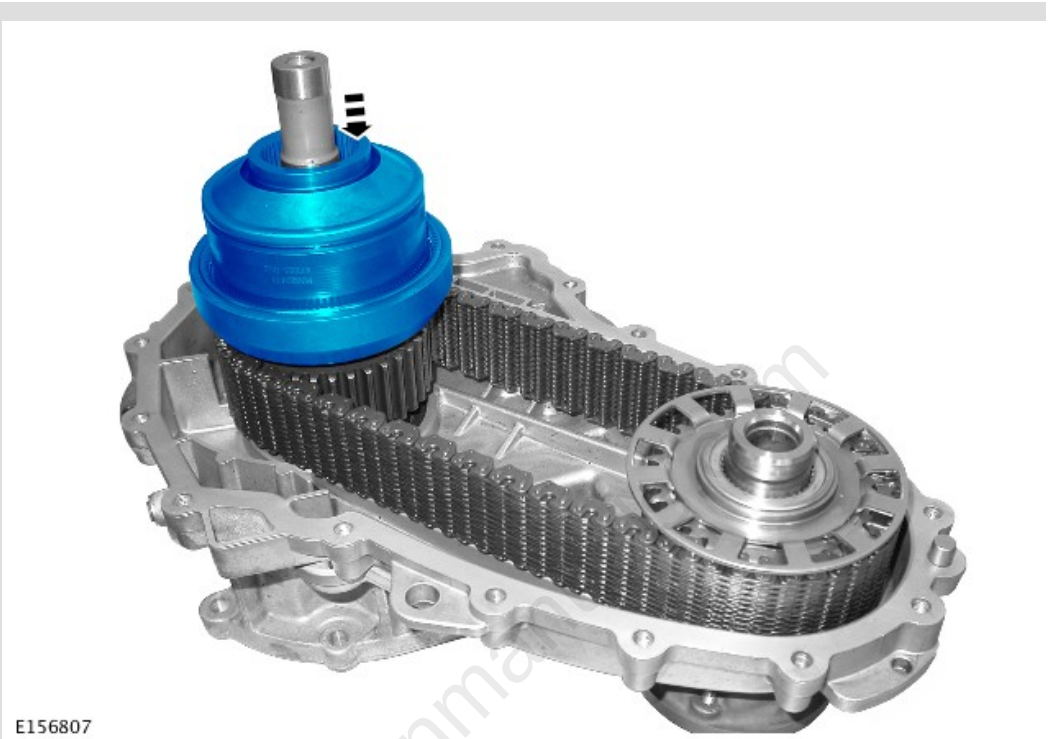

E156807

transmissionmanuals.com

8.

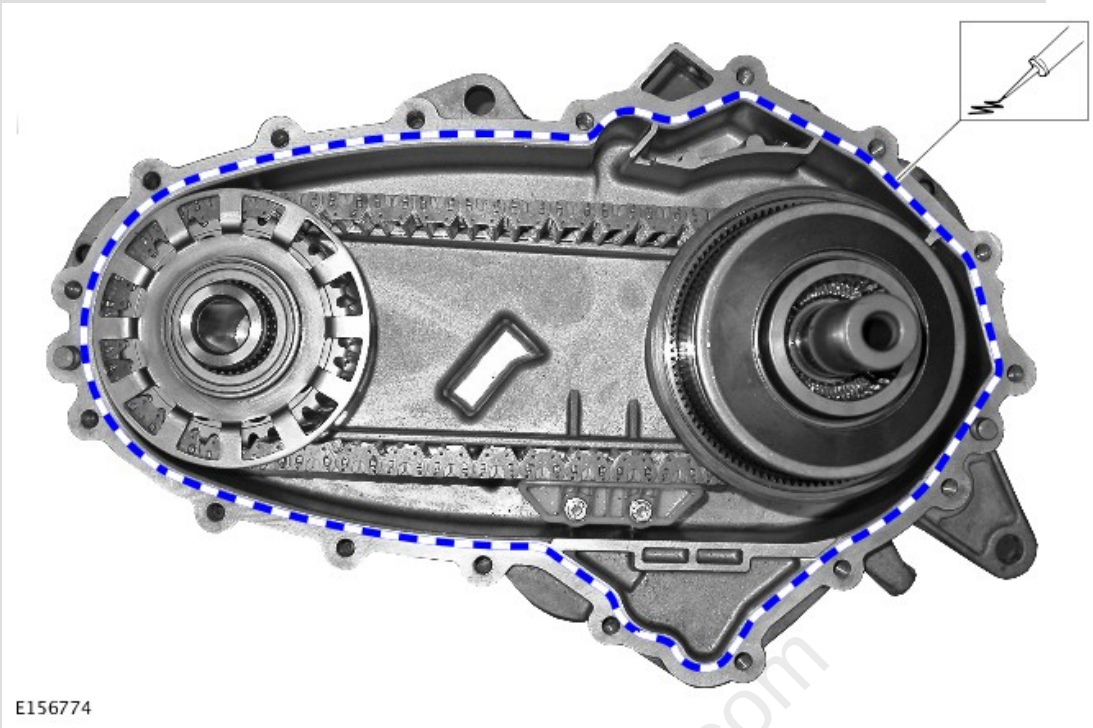

Apply a 2 mm bead of sealant to one surface of the transfer case mating face, as shown.
Refer to: Specifications (308-07 Four-Wheel Drive Systems, Specifications).

9.

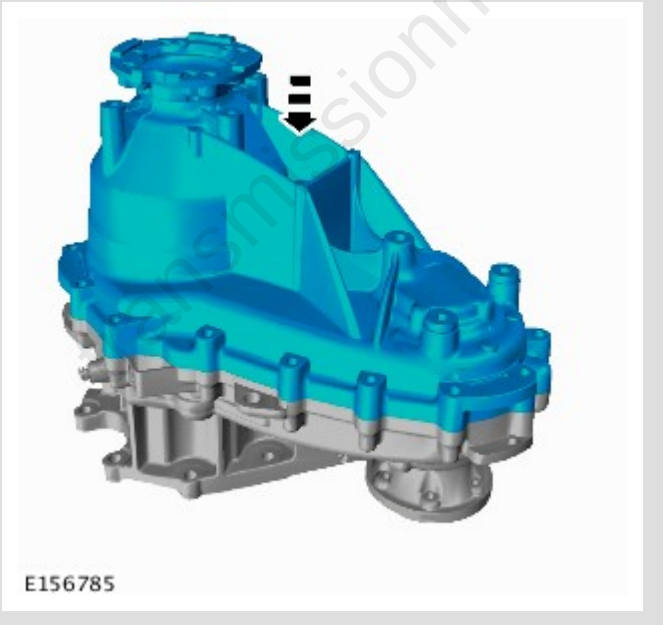

transmissionmanuals.com

10.

CAUTION:

Only tighten the bolts finger-tight at this stage.

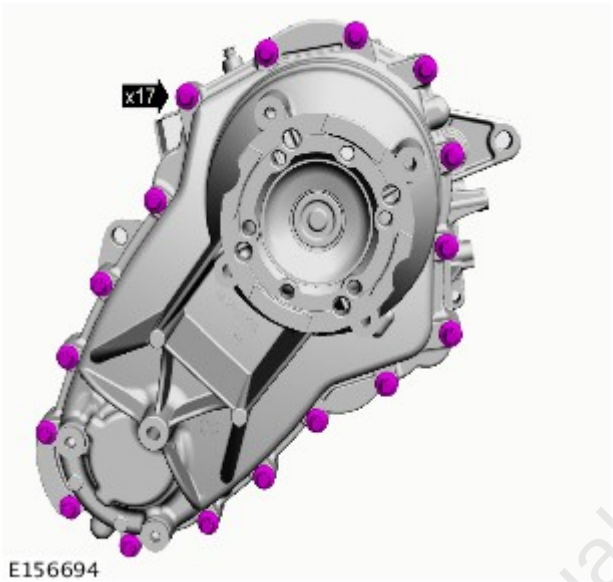

Install the 17 transfer box case bolts.

11.



Torque: **10 Nm**

transmissionmanuals.com

12.

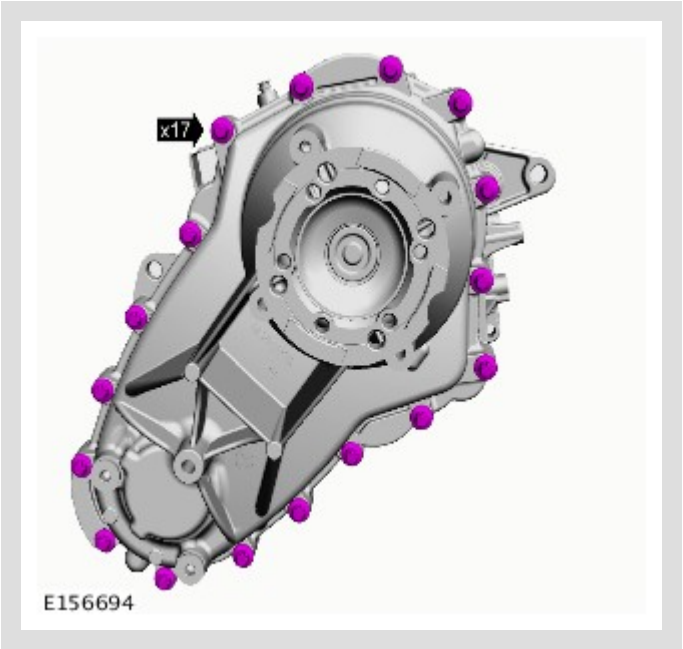

Torque: **35 Nm**

13. Install the transfer case.
Refer to: Transfer Case - TDV6 3.0L Diesel - Gen 2/TDV6 3.0L Diesel /TDV6 3.0L Diesel - Gen 1.5 (308-07 Transfer Case - [+] Single Speed Transfer Case, Installation).
Refer to: Transfer Case - V6 S/C 3.0L Petrol (308-07 Transfer Case - [+] Single Speed Transfer Case, Installation).
Refer to: Transfer Case - INGENIUM I4 2.0L Diesel (308-07 Transfer Case - [+] Single Speed Transfer Case, Installation).

14. Fill the transfer case with the recommended fluid.
Refer to: Transfer Case Draining and Filling (308-07 Transfer Case - [+] Twin Speed Transfer Case, General Procedures).

15. Connect the battery ground cable.
Refer to: Specifications (414-00 Battery and Charging System - General Information, Specifications).

transmissionmanuals.com